Thermoplastic Mudguards

Series 50 Twin Wheel

Product Information

- Unique styling, advanced design
- Manufactured with high quality polyethylene, which gives increased product rigidity, whilst offering excellent impact and cold cracking resistance
- Best visual results when fitted with IT bracket system
- Resistant to most chemicals
- Available in Black and over 60 Fleet Colours
- Lightweight

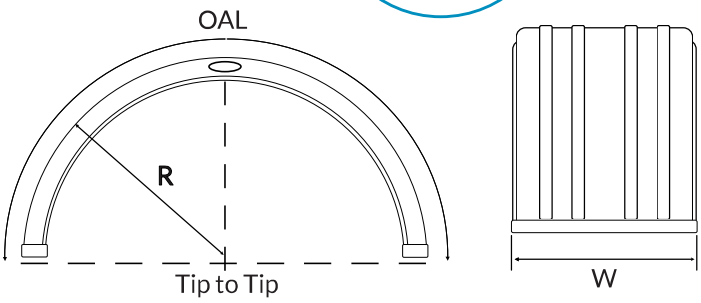

Part No.	Width	Radius	Overall Length	Tip To Tip	Tyre Sizes
50475	475mm	430mm	1430mm	860mm	195R14, 195/75R14, 205R14, 195R15, 205/70R15, 215R15, 185R16, 195/70R15, 185/75R16, 195R16, 195/75R16
50500T	500mm	500mm	1571mm	1000mm	215R14, 215/75R14, 225/70R15, 225/75R15, 215/75R16, 225/70R16, 7.50R16, 8.50R17.5, 205/75R17.5
50530LP	535mm	504mm	1626mm	1008mm	8.25R15, 235/75R15, 225/75R16, 8.25R16, 9.5R17.5, 10R17.5, 215/75R17.5, 225/75R17.5, 235/75R17.5, 8R19.5, 9.00R19.5, 6.50R20, 7.00R20
50610	610mm	535mm	1620mm	1070mm	10R15, 255/75R15, 265/70R15, 245/75R17.5, 265/70R17.5, 275/75R17.5, 245/70R19.5, 265/70R19.5, 285/70R19.5
50650	650mm	645mm	2012mm	1290mm	11.00R20, 285/75R22.5
50650LP	650mm	600mm	1895mm	1200mm	295/75R17.5, 10.5R20, 285/60R22.5, 11/70R22.5, 295/65R22.5, 275/70R22.5
50670	670mm	685mm	2131mm	1370mm	12.00R20, 12R22.5, 11R24, 12.00R24, 11R24.5
50695	695mm	635mm	1995mm	1270mm	12/80R22.5, 305/70R22.5, 295/80R22.5 tractor units, 305/70R19.5, 295/60R22.5, 285/70R22.5, 295/70R22.5, 305/60R22.5, 315/60R22.5
50710	710mm	635mm	1905mm	1270mm	315/70R22.5, 13R22.5, 315/80R22.5, 305/75R24

All dimensions nominal. The manufacturer reserves the right to alter sizes, specifications etc. without prior notice.